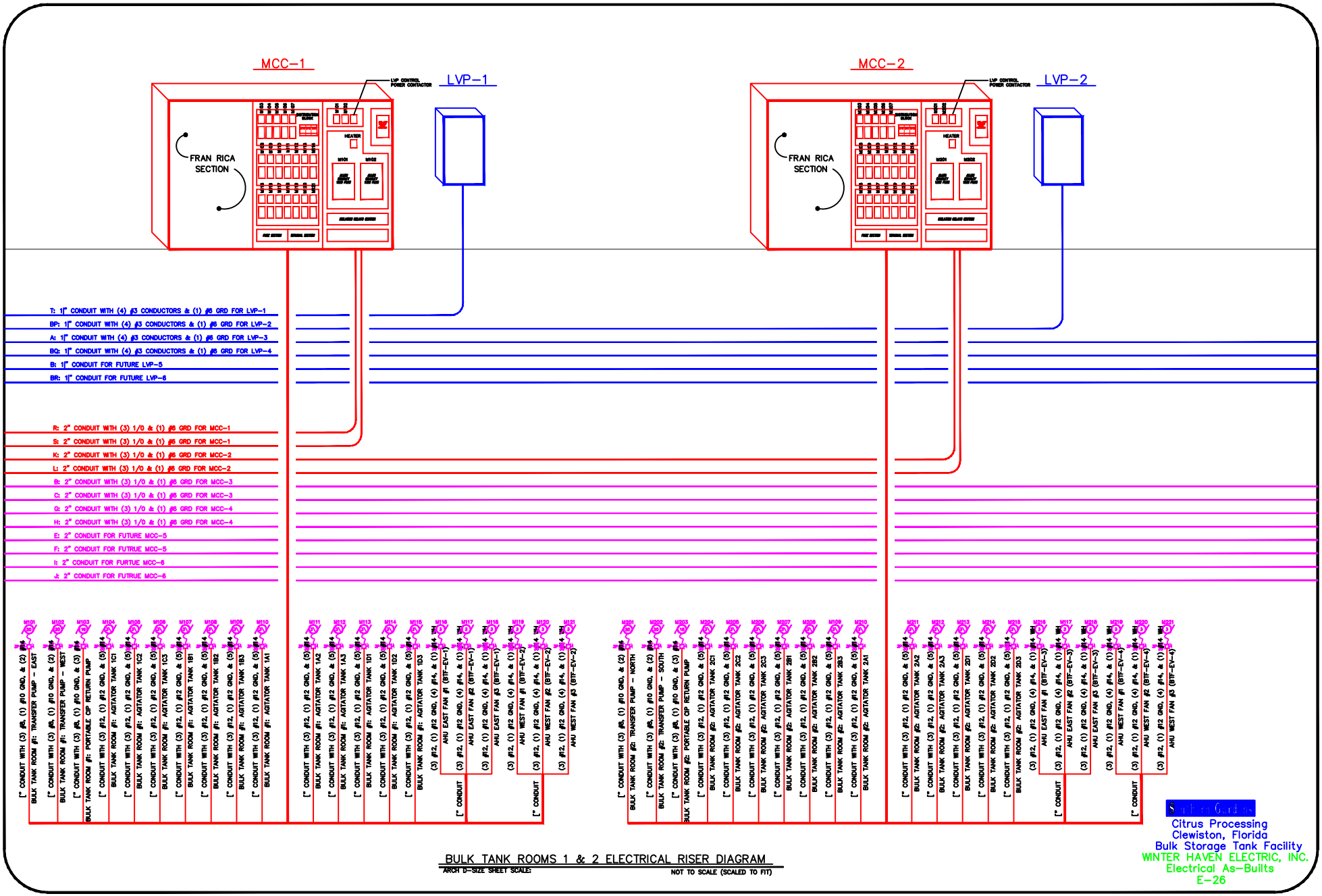

BULK TANK ROOMS 1 & 2 ELECTRICAL RISER DIAGRAM

ARCH D-SIZE SHEET SCALE: NOT TO SCALE (SCALED TO FIT)

Citrus Processing
Clewiston, Florida
Bulk Storage Tank Facility
WINTER HAVEN ELECTRIC, INC.
Electrical As-Builts
E-26